T-MFISM-A

Multi-Functional Integrated Service Multiplexer

Overview

T-MFISM-A and CPE is a powerfull access platform, that combines video, audio and data service together. Various service interface, including: E1, 10/100Base-Tx, V.35, Audio and Video, 64Kbps, V.35(N*64K), RS232/RS485, FXO/FXS, magnet telephone, hot line telephone, E&M etc.

Telkolink provides all types of PCM multiplexers, from high-end to low-end, from standard size to miniaturized, from rack mount to portable. All multiplexers offer variable service interfaces, flexible system configuration, high reliability and cost competitiveness. **T-MFISM-A** and CPE multiplexer is a key member of PCM multiplexer family.

T-MFISM-A and CPE is a powerful multi-service access platform that combines video, audio and data service together. **T-MFISM-A** is an aggregation device that can be inserted up to 16 service cards, which can be E1, MDX, DATA, CHU, VIDEO, PWR card, etc, **T-MFISM-CPE** is a CPE device that used by end customers. T-MPEG-C12 MPEGII/IV Coder/Decoder can work together with **T-MFISM-CPE** to provide video service at the end. **T-MPEG-C12** converts analog audio and video signals to DVD-quality like digital stream

Features

- Integrates audio, data and video in one system.
- All the interfaces comply with the international standard.
- Various service interface, including: E1, 10/100Base-Tx, V.35, Audio and Video, 64Kbps, V.35(N*64K), RS232/RS485, FXO/FXS, magnet telephone, hot line telephone, E&M etc.
- Flexible configuration and setup, plug and play.
- The bandwidth of data and video can be widened smoothly.
- Unified T-NM-VIEW network management platform, managing and configuring easily. With perfect supervision and test function, remote end manageable.
- Flexible video configuration, MPEGII and MPEGIV mode can be configured by software.
- As MPEGII mode, transport bandwidth is 1~4 ports 2M channel. One of the channels can be divided into framed and it can be combined with the voice into one 2M channel. The transport rate is adjustable on the basis of N*64K(N=1~31).
- As MPEG-4 mode, audio can be transported with voice and data in one 2M channel.
- For every service direction, T-MFISM-CPE can provide 2 ports Ethernet interface with different priority. It uses the high priority to transport image and uses the low priority for data.
- Max capacity of T-MFISM-A is 64*2M, max voice capacity 120 channels.
- Powerful cross connection capacity 2048×2048 (64k basis) of T-MFISM-A. T-MFISM-A can be configured as full 64×E1 DXC.
- The power supply card and cross connection card support 1+1 redundancy with high reliability. All the cards support hot-swapping.

Address : Perpa Ticaret Merkezi, A Blok No.516 Şişli/İstanbul | Tel : +90 212 3204030 | Fax : +90212 3200255 | e-mail : info@telkolink.com

www.telkolink.com

© 2009 telcolink Inc. All rights reserved. Information in this document is subject to change without notice. All company names, logos, and product designs that are trademarks or registered trademarks are the property of their respective owners. 617-000175 Rev. C

Specifications

Items		Description
T-MFISM-A High-end Integrated Service MUX		19 inch standard rack with 16 physical slots, 12 slots for general service cards
Module type	PWR card	Support 1+1 dual protection,DC-48V input Ring voltage 75V, 25Hz, provide +5V and -5V for system
	MDX card	Provide 64×E1 cross connection ability Main control and monitoring function With 8×E1 interface (75Ω or 120Ω)
	E1 card	With 4×E1 or 8×E1 interface for more E1 applications
	CHU card	Provide 10 ports voice channels, support FXO/FXS, magnet phone, hotline phone, E&M, 64Kb data, RS232 data, RS485 data, V35 data etc.
	Data card	Support 10/100Base-T module and V35 data module
	VIDEO card	With 4×E1 interface, support MPEG-2 or MPEG-4 coding and decoding
T-MFISM-CPE High-end Integrated Serv. MUX		1U Compact Design with module
Module type	CHU module	Support up to 16 voice channels
	Data module	V35 data module 10/100 Base-T module Wideband ETH×E1 module
NMS interface	Network management	RS232 or RS485 - Ethernet (SNMP)
Video	Video rate	128K-8M bps
	Video output mode	Fixed rate or variable rate
	PAL/NTSC	both supported
	PAL mode	720×576, 704×576, 640×576, 480×576, 352×576, 352×288, 176×144
	NISC mode	720×480, 704×480, 640×480, 480×480, 352×240, 352×480, 176×144
	Video output mode	TS/PS
	Code	ISO/IEC-14496-2 MPEG-4 SP@L1, L2 and L3 ISO/IEC-13818-2 MPEG-2 MP@ML
Audio	Audio sampling freq.	8K, 32K, 44.1K, 48KHz
	Coding mode	MPEG1 Audio Layer I/II, G.729, G.711, MP3
	Rate	8K,32K, 64K, 192K, 224K, 384K bps
	Audio mode	Stereo, Joint, Dual, Mono
Power supply consumption	T-MFISM-A	DC-48V<100W (full loaded)
	T-MFISM-CPE	DC-48V or AC 220V<20W
	T-MPEG-12C	AC220V<8W
Dimension	T-MFISM-A	W×H×D (mm) 440×310×265
	T-MFISM-CPE	W×H×D (mm) 440×44×209
	T-MPEG-12C	W×H×D (mm) 440×44×209

Typical application

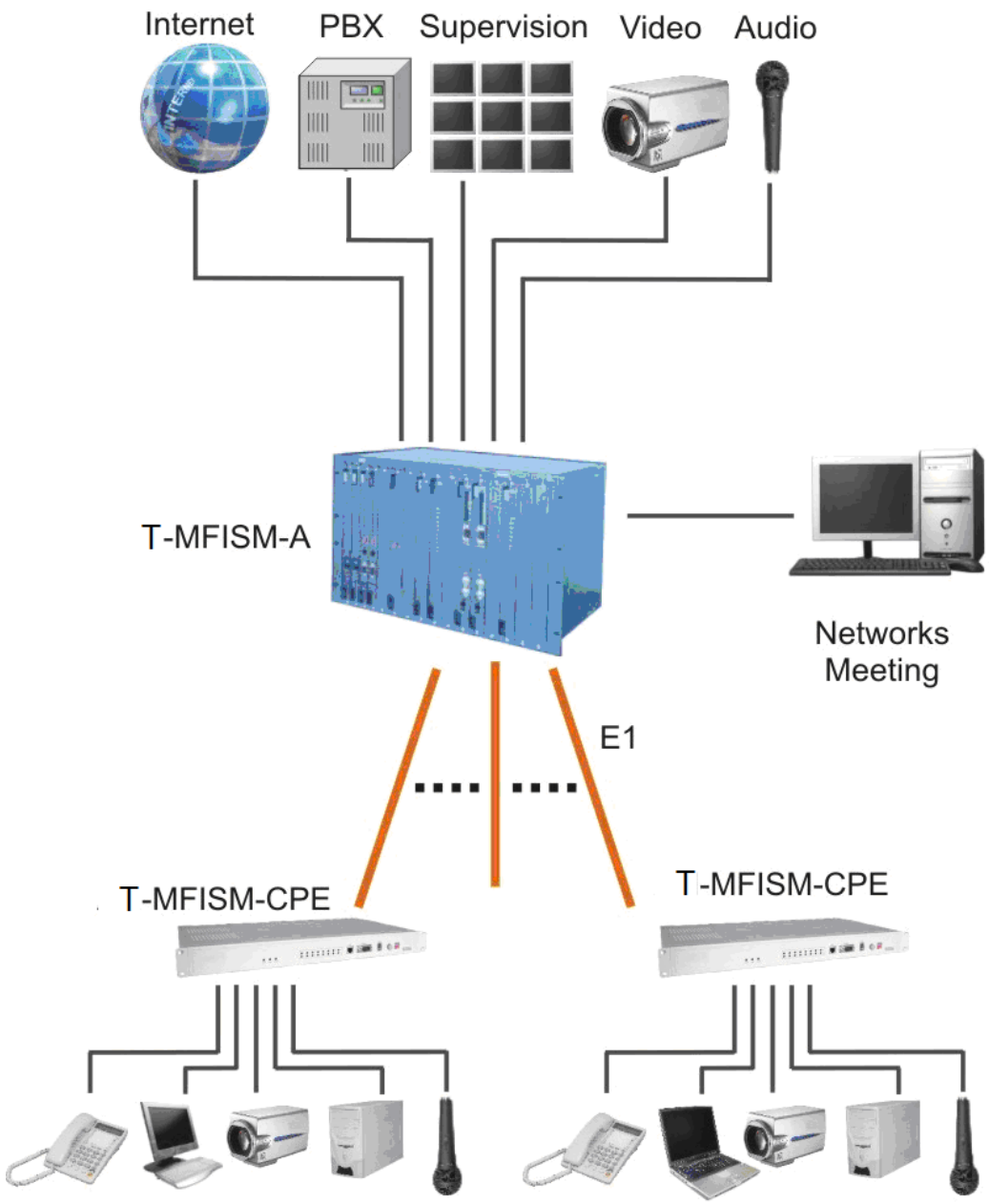

Address : Perpa Ticaret Merkezi, A Blok No.516 Şişli/İstanbul | Tel : +90 212 3204030 | Fax : +90212 3200255 | e-mail : info@telkolink.com
www.telkolink.com

© 2009 telcolink Inc. All rights reserved. Information in this document is subject to change without notice. All company names, logos, and product designs that are trademarks or registered trademarks are the property of their respective owners. 617-000175 Rev. C